

Contents

About This Manual
Tutorial Video
Overview
Appearance
Control Panel
Display Screen
Ambient Light
Get Started
Components Assembly
Power Connection
Button Operation
Control via EcoFlow App
Storage and Maintenance
Storage
Cleaning
Safety Instructions and Compliances
Disclaimer
Safety Instructions
In Case of Emergency
Warning
Regulatory Compliance
Technical Specifications
What's in the Box

About This Manual

- This manual contains an introduction to this power station, and details on its operation, management, and maintenance. Please note that this manual may be updated without prior notice.
- The availability of certain accessories and features described in this manual may vary depending on your country or region.
- All images displayed in this manual are for demonstrative purposes only. The type and appearance of the AC power cord (pluggable/embedded) may vary depending on local regulations. Please refer to the actual product received. The following examples are based on the embedded AC power cord version.
- If you are reading this manual in PDF format, please note that you can access it online at EcoFlow Support for a better experience and the latest updates.



Tutorial Video



Overview

EcoFlow WAVE 3 (hereinafter referred to as "WAVE 3" or "the product") is a portable air conditioner that allows you to easily switch between Automatic, Cooling, Heating, Fan, and Dehumidification functions with the control panel. Connect to the EcoFlow app for remote control and access to features such as Timer and Pet Mode.
The product supports AC input. When connected to the EcoFlow WAVE 3 Add-on Battery (or other EcoFlow Portable Power Stations), additional power supply options are available based on your actual needs.

Appearance



1 **Display screen & control panel**

Adjusts primary settings and displays operating details.

2 **Front air outlet**

Face this side towards the interior (install the exhaust kit for outdoor use). Lift the fan blade during use, and close it during storage to prevent dust buildup.

3 **Ambient light**

Displays operating status.

4 **Front air inlet & filter**

Install the exhaust kit for outdoor use.

5 **Rear air outlet**

Install the exhaust kit for indoor use.



6 **Cable winder slot**

Stores the AC power cord when not in use.

7	Protective cover

Close the cover when not in use to protect against liquids and dust.

8	AC AC power cord/inut port

Connects the product to an AC power source (e.g., wall outlet) for power.
※ The type and appearance of the AC power cord (pluggable/embedded) may vary depending on local regulations.

9	Extra battery port (XT150)

Connects the product to the WAVE 3 Add-on Battery or other compatible EcoFlow products for power.

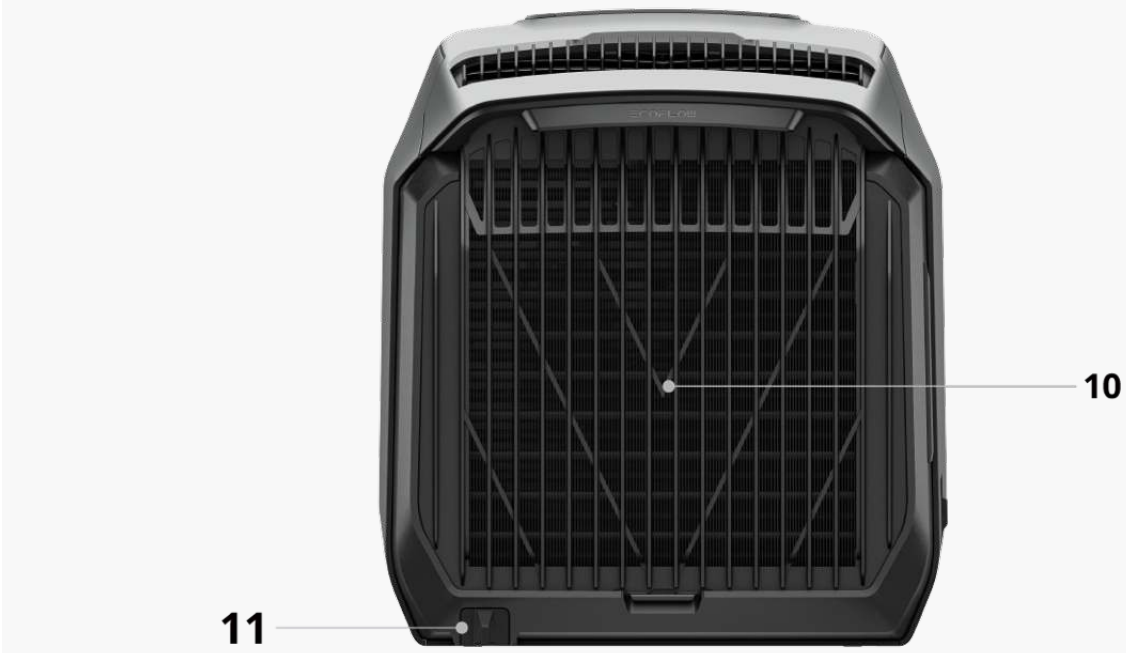

10	Rear air inlet & filter

Install the exhaust kit for indoor use.

11	Drain plug

Open the plug and connect the drain pipe before use to avoid water leakage.

Control Panel



1	Temperature / Humidity control button	4	Drainage button

2	Function select button	5	Power button
3	Mode select button	6	Fan speed button

Please refer to the **"Button Operation"** chapter for more details.

Display Screen

Some icons may be updated to enhance the user experience. Please refer to the actual display.

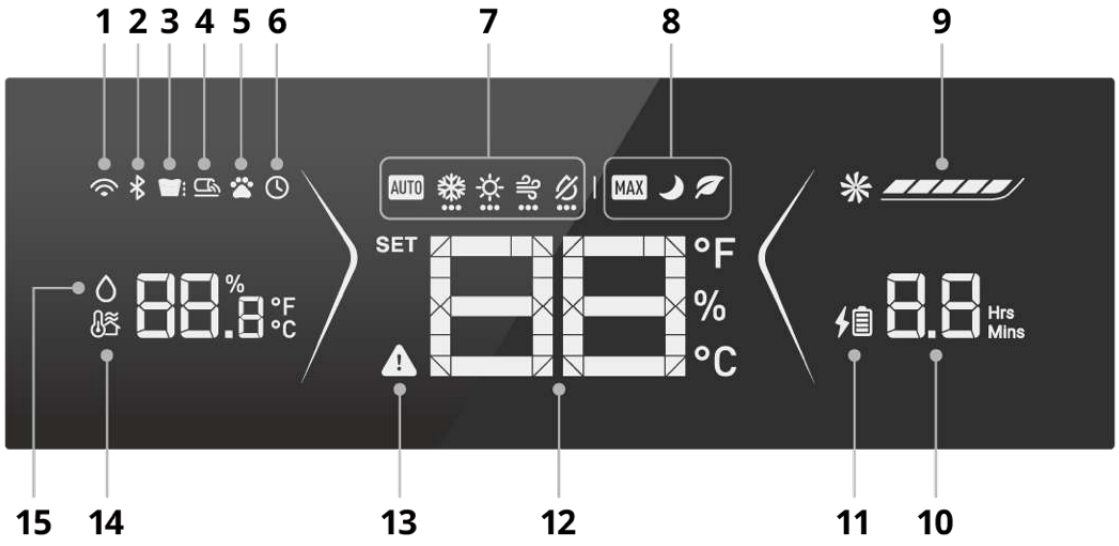

1 Wi-Fi status

On: Wi-Fi connection successful.
Flashing: Wi-Fi connected to the power station is not available.
Off: Wi-Fi disconnected.
※ Please refer to the "Control via EcoFlow App" chapter for more details.

2 Bluetooth status

On: Bluetooth connection successful.
Flashing: Bluetooth pairing in progress.
Off: ① Wi-Fi is connected, and Bluetooth is disconnected, or ② Bluetooth is disconnected because it is turned off on your phone.
※ Please refer to the "Control via EcoFlow App" chapter for more details.

3 Water level (low, medium, high, full)

On: Displays the amount (low, medium, high level) of water accumulated in the internal tank.
Flashing: Full water level. The product will switch to fan function. Please drain the water in time.
※ Do not move the product when the water level reaches high or above.

4 Drainage

On: Automatic drainage is activated.
Flashing: Thorough drainage is in progress.

5 Pet care

On: Pet care mode is activated in the EcoFlow app.

6	Timer

On: At least one pending timer is configured in the EcoFlow app.

7	Automatic / Cooling / Heating / Fan / Dehumidification function

On: The current function is activated.
Flashing: The current function is selected and loading. Press the function button again to switch to the next one.
Loading: Switching to the current function.

8	Max / Sleep / Eco mode

On: The current mode is activated.

9	Fan speed

On: Displays the current fan speed level.

10	Remaining charging / discharging time

On: Displays the remaining charging or discharging time when connected to an extra battery.
※ Check the accurate time when the product starts operating, as it may fluctuate while switching functions.
※ Check the lightning icon next to the Battery Level to view the charging or discharging status.

11	Battery level

On (with solid bars): Displays the current battery level.
· 0-25%: 1 bar
· 25%-50%: 2 bars
· 50%-75%: 3 bars
· 75%-100%: 4 bars
On (with flashing bars and lightning icon): The connected extra battery is charging. The lightning icon will not display when discharging power exceeds charging power.
On (without bar): The extra battery is not connected.

12	Set temperature / humidity

On: Displays the temperature level (°C / °F) or humidity level (%) you set.

13	Error icon and error code

On: An error has occurred. Check the EcoFlow in-app instructions for troubleshooting.

14	Ambient humidity

On (when dehumidifying): Displays the ambient humidity level (%).

15	Ambient/air outlet temperature

On: Displays the air outlet temperature level (°C / °F) by default. Press and hold the **Mode button** to switch to the ambient temperature level.

Ambient Light

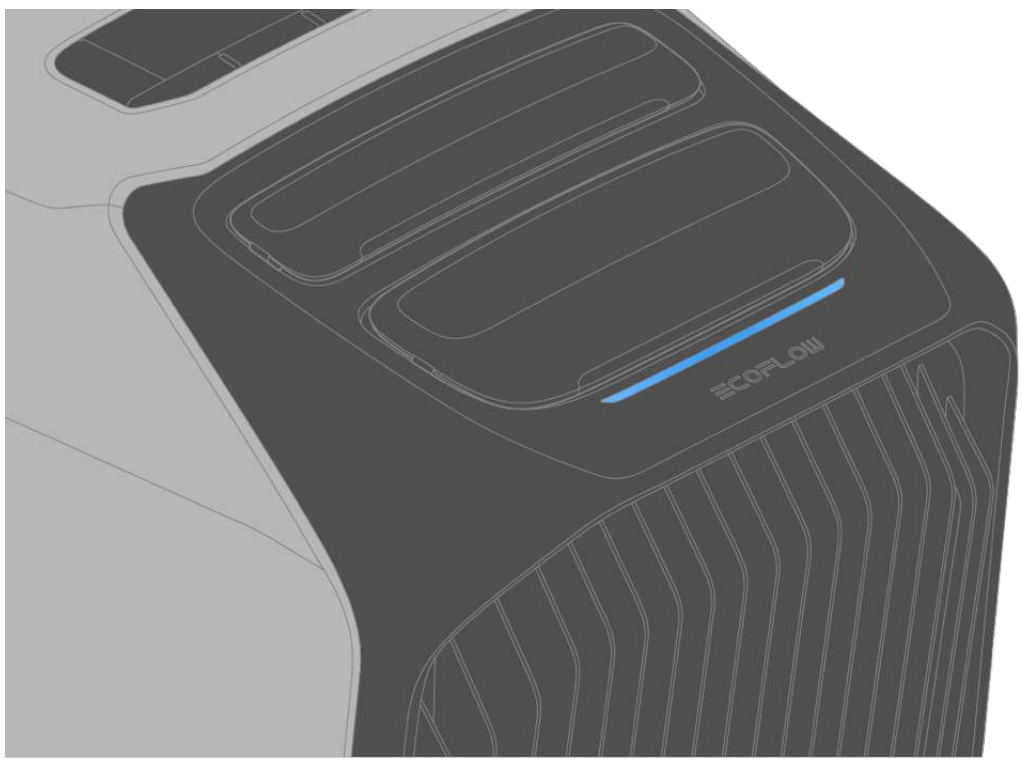

Breathing blue

Cooling status

Breathing orange

Heating status

Breathing white

Fan status

Breathing purple

Dehumidification status

Solid red

Error alarm. An error has occurred. Check the EcoFlow in-app instructions for troubleshooting.

Carousel white

Firmware update

Get Started

Components Assembly

Exhaust Duct & Adapter Cover

Before using this product, ensure that the exhaust ducts and adapter covers are properly assembled to the product; otherwise, operational efficiency may be impacted.

The diagrams below show the standard air circulation method. In limited spaces, the air inlet components can be temporarily removed to allow continued use of the air conditioner. Please note that this may impact operating performance.

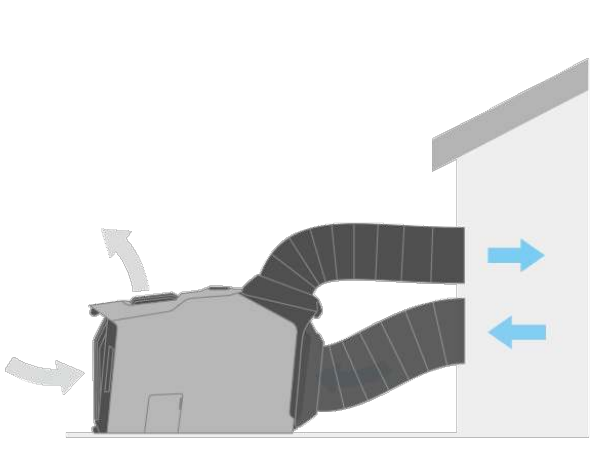

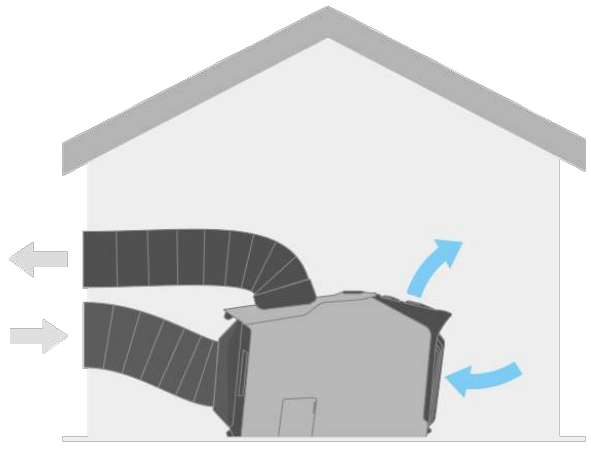

- Outdoor Scenarios
- Indoor Scenarios

For optimal performance, use the product in a space of **11–17 m² (120–180 ft²)**.

Indoor Scenarios

For enclosed spaces, use the rear air inlet and outlet components to expel exhaust air. Ensure the ducts are not overly stretched or bent to maintain efficiency.

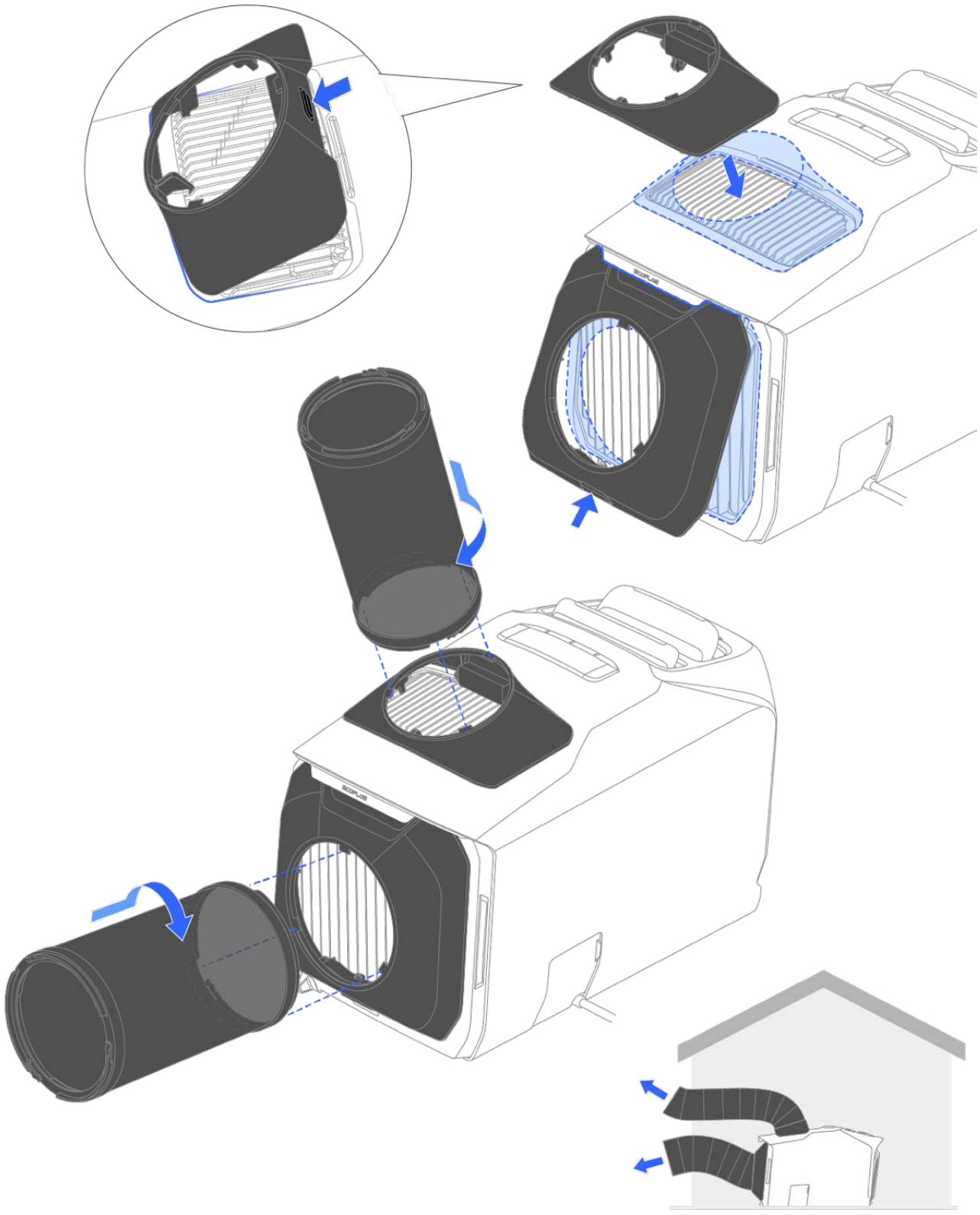

1. Install the adapter covers

Align them with the edges of the air inlet and outlet, insert the clasps, and push down until you hear a ''click'' sound.

2. Attach the exhaust ducts

Align the markings on the ducts with the adapter covers, snap them into place, and rotate clockwise.

3. Organize the ducts

Extend the ducts outside the window or tent, ensuring that the openings face away.

> Do not use the exhaust ducts in rain or snow to avoid wetting the product.

Outdoor Scenarios

If the interior space is small or noise reduction is needed, place the product outdoors and install the front air inlet and outlet components to deliver cooling or heating.

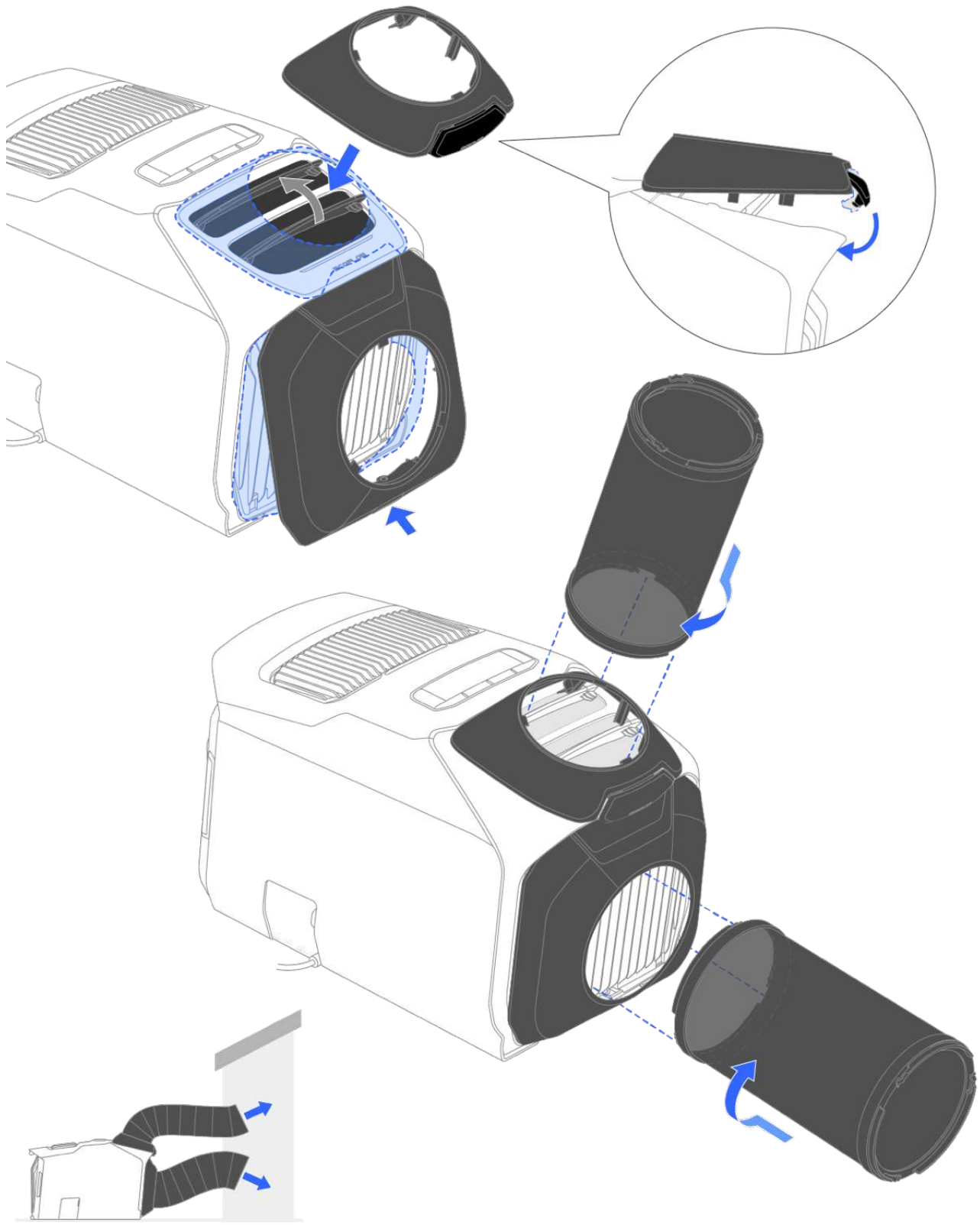

1. Install the adapter covers

Align them with the edges of the air inlet and outlet, insert the clasps, and push down until you hear a ''click'' sound.

2. Attach the exhaust ducts

Align the markings on the ducts with the adapter covers, snap them into place, and rotate clockwise.

3. Organize the ducts

Extend the ducts inside the window or tent, ensuring that the openings face away.

DIY Window Vent Board

The product includes a pre-cut duct size template. You can use it to DIY a truck, RV, or home window vent board, to seal gaps and vent exhaust air efficiently.

You will need:

- Foam board (or similar material) sized to your window
- Marker
- Knife
- Wide adhesive tape

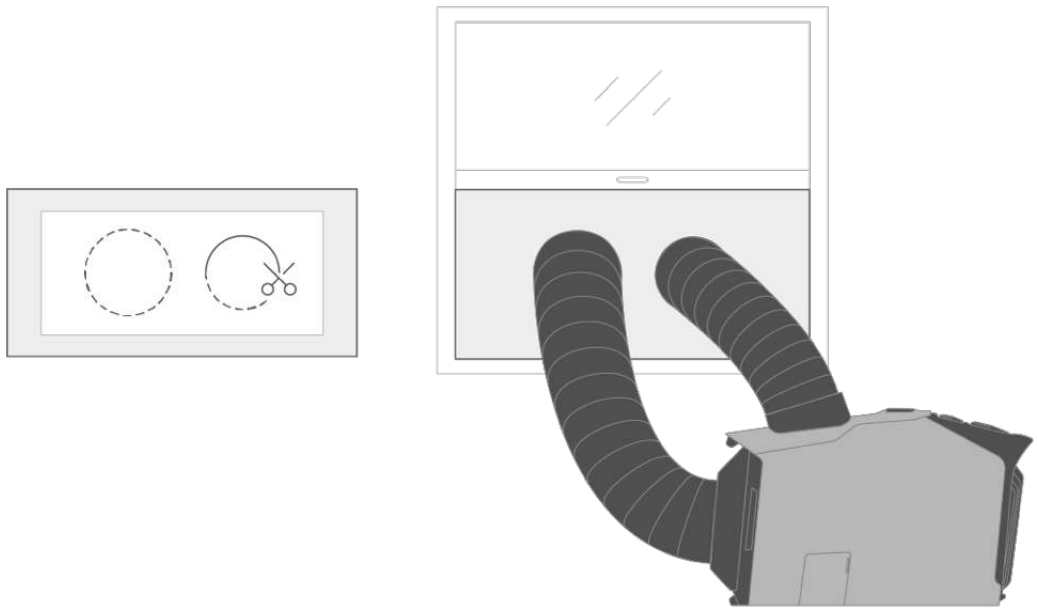

1. Trace the shapes of the exhaust ducts onto the foam board.
2. Cut along the traced lines.
3. Insert the ducts into the board.
4. Place the board in the window and seal the edges with adhesive tape.

Drain Pipe

The product generates condensate during operation. **Connect the drain pipe before use** to avoid water leakage.

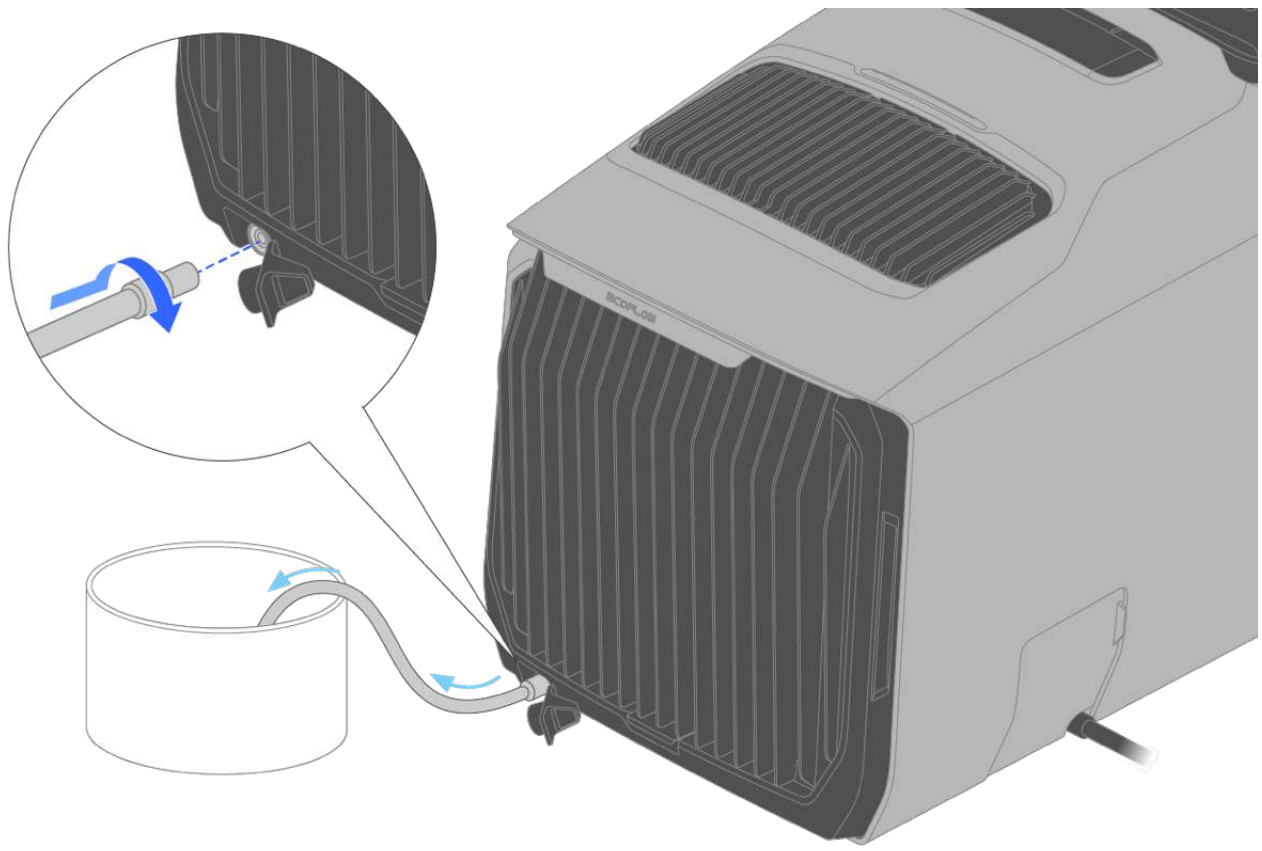

Automatic drainage

After power-on, press the Drainage button once to turn on or off automatic drainage.

Thorough drainage

Before moving the product, press and hold the drainage button (until the drainage icon flashes) to fully pump out any accumulated water.

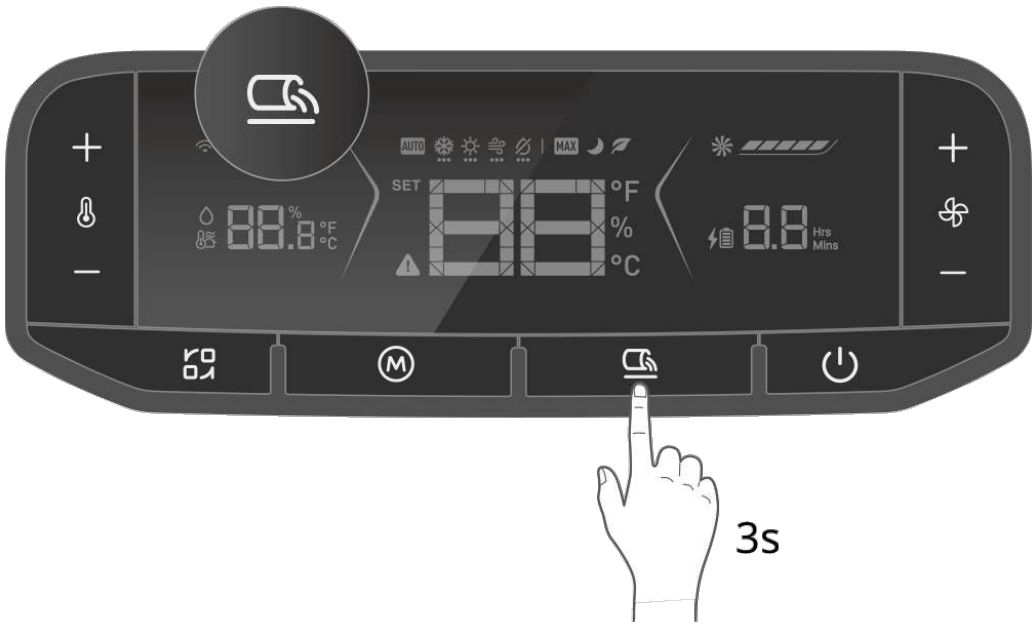

The product will switch to fan function once the water level reaches full (icon flashing). Real-time water level status is displayed on the screen.

Winder

The Winder helps you store the AC power cord.

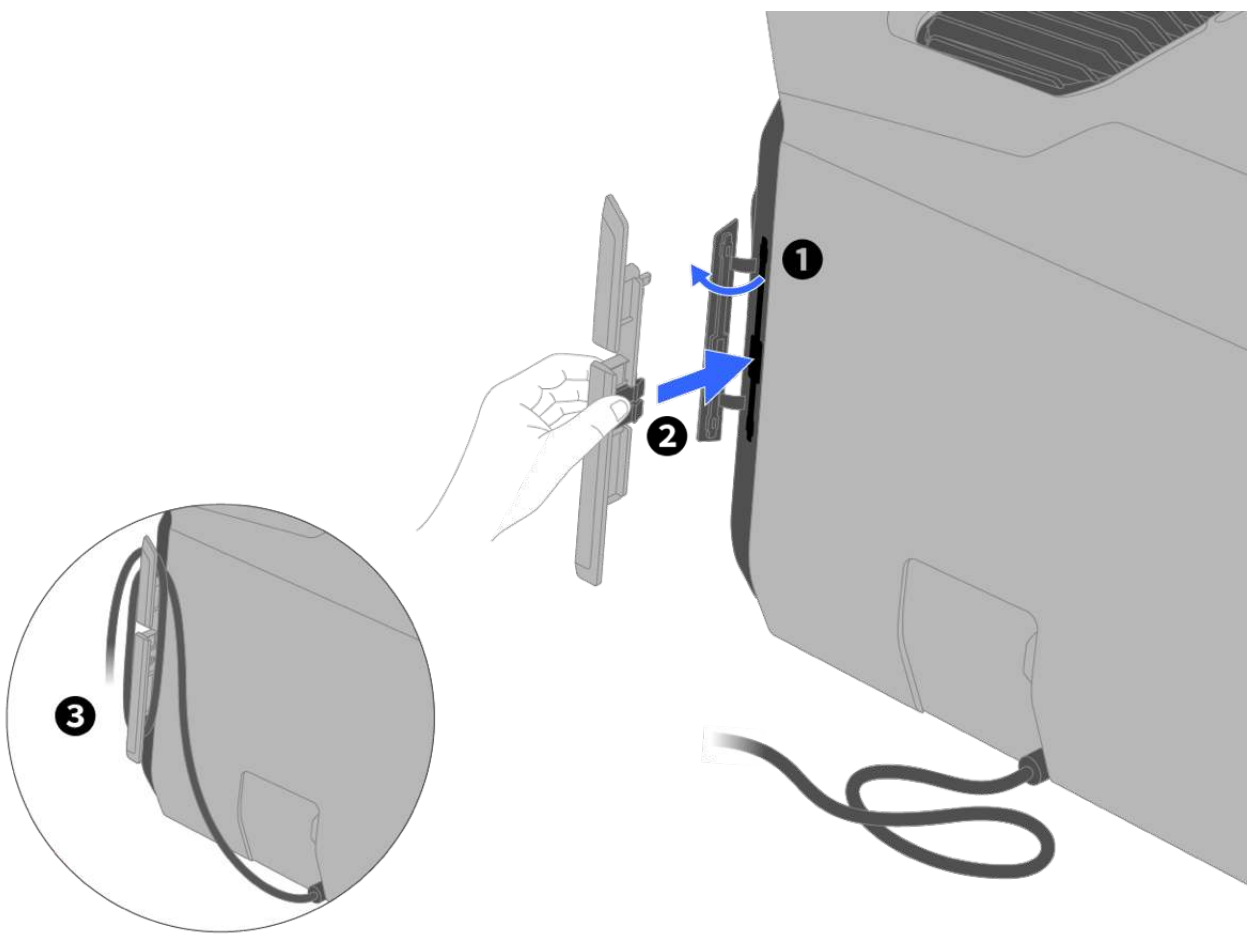

1. Open the dust plug.
2. Pinch the winder and insert it into the slot.
3. Wrap the cable around the winder.

Power Connection

The WAVE 3 features an AC port and an XT150 DC Extra Battery port.

Slide the cover open, plug in the power cord, then press and hold the Power button to start.

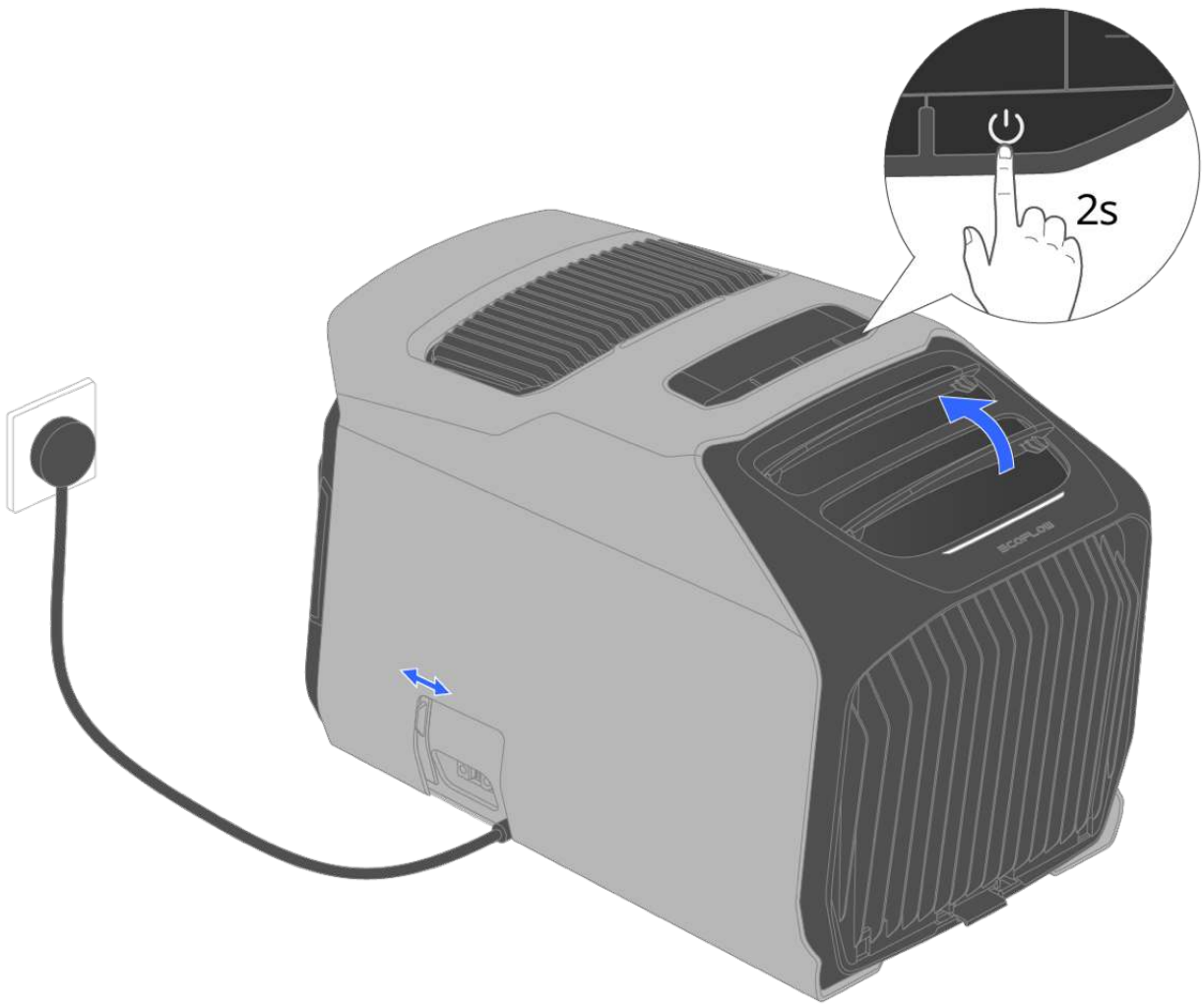

From an AC Outlet

The product is compatible with 100-240V AC. Please use **the provided AC power cord** for power supply.

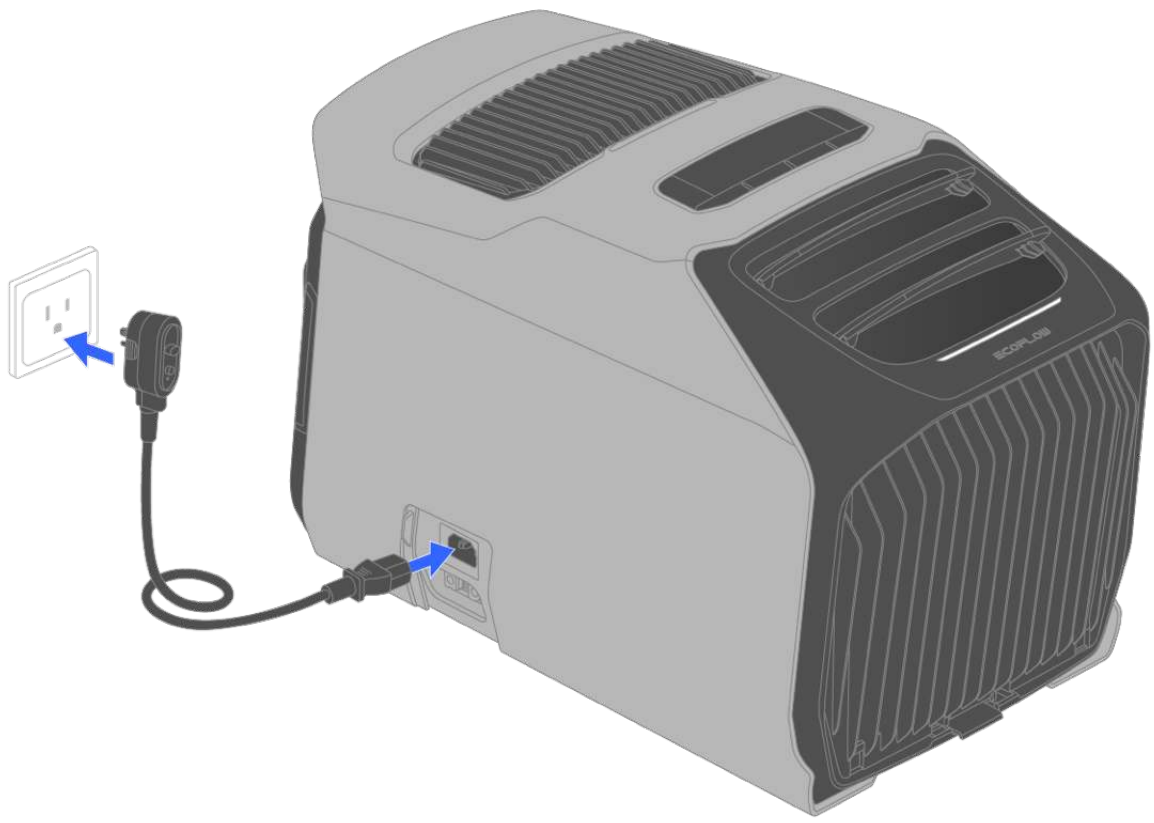

AC power cord types (pluggable/embedded) may vary based on local regulations. Please refer to the actual product.

Via the Extra Battery Port

The product is compatible with multiple EcoFlow power stations and extra batteries.

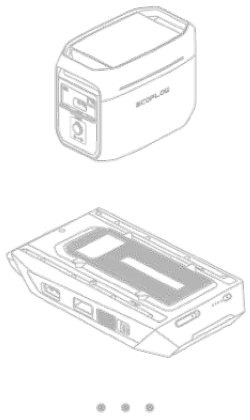

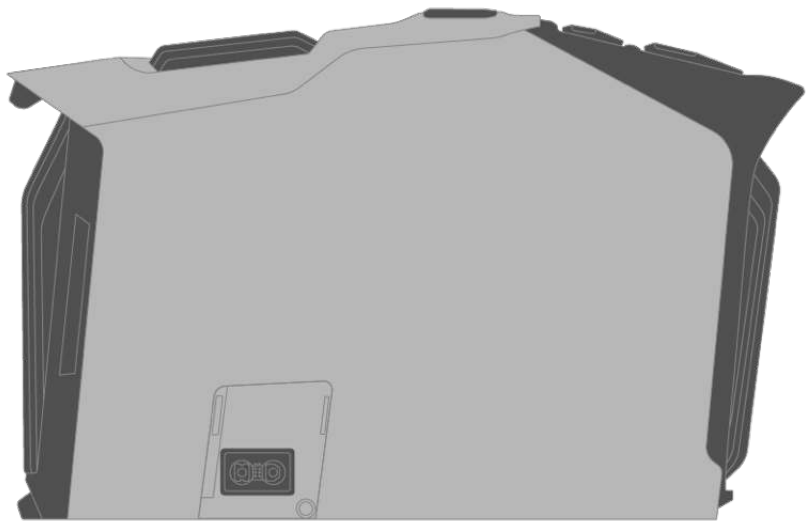

Product	Cable & Adapter Required
EcoFlow WAVE 3 add-on battery	EcoFlow WAVE 3 Add-on Battery Cable
EcoFlow WAVE 2 add-on battery	EcoFlow WAVE 2 Add-on Battery Cable
EcoFlow DELTA Max series	EcoFlow Extra Battery Cable
EcoFlow DELTA 2 series	EcoFlow Extra Battery Cable
EcoFlow DELTA 3 series	EcoFlow Extra Battery Cable
EcoFlow DELTA Pro	EcoFlow Extra Battery Cable, EcoFlow Smart Generator Adapter
EcoFlow DELTA Pro 3	EcoFlow Extra Battery Cable, EcoFlow Smart Generator Adapter

Compatible models and accessories may be updated. Please check with the official EcoFlow Customer Service for the latest information.

Button Operation



Temperature / Humidity control button (+/-)

Press once: Set the target temperature or humidity.

Press and hold: Adjust quickly.

Function select button

Press once: Enter function selection. Press again to switch between different functions (Automatic*, Cooling, Heating, Fan, and Dehumidification**).

- Automatic: Automatically detects ambient temperature and maintains a comfortable range for the human body. Set the temperature range in the EcoFlow app.
- Dehumidification: Please note that the target humidity level should be lower than the real-time ambient humidity level.

Press and hold: Switch between temperature units (°F/°C).

Mode select button

Press once: Switch between modes* (while in Cooling or Heating) or exit mode selection.

- Max mode: Rapidly adjusts room temperature by operating at maximum compressor performance.
- Sleep mode: Operates at a low noise level.
- Eco mode: Reduces overall power consumption.

Press and hold: Switch between displaying the ambient temperature and the air outlet temperature.

Drainage button

Press once: Start or stop automatic drainage process.
Press and hold: Start thorough drainage process (with drainage icon flashing). The process completes automatically when the water tank is fully emptied.

Power button

Press once (when powered on): Turns the display screen on or off .
Press and hold for about 2 seconds: Power on or enter standby. To power off the product, unplug all connected cables.
Press and hold for about 5 seconds (when in standby): Reset Bluetooth and Wi-Fi. Press and hold the button until the screen displays the power-on animation twice to reset the Bluetooth and Wi-Fi connections.

Fan speed button (+/-)

Press once: Select fan speed (levels 1 to 5).

Control via EcoFlow App

Control, monitor and customize your product from afar with the EcoFlow App.

- **Monitor:** Remote monitoring of current battery level, power usage, and charging status of the extra battery connected to EcoFlow WAVE 3; remote monitoring of the water tank level and full water level notifications.
- **Control:** Remote control to turn on the product (when on standby) and switch functions or modes.

- **Customize:** Auto shutdown timer.

Scan the QR code or download it at:
https://download.ecoflow.com/app

Bind Device and Set Up Internet

After successfully registering an EcoFlow account, bind your EcoFlow devices to your account to ensure remote access to the device's settings.

To bind a new EcoFlow device

1. Visit the EcoFlow app and log in to your EcoFlow account.
2. Tap the Add Device button or ➕ icon in the top right corner to search for new EcoFlow devices.
3. Select your EcoFlow device and follow the pop-up instructions to complete device binding and Wi-Fi setup.

Storage and Maintenance

Storage

- Storage Temperature: -10°C to 60°C (14°F to 140°F).
- Store the product in a tidy, dry, and well-ventilated place.
- Keep the product away from liquids, intense heat, and sharp objects.
- Press and hold the drainage button to fully pump out any condensate water.
- Unplug all power sources, close the fan blade and the protective cover.

Cleaning

Regularly remove the air inlet filters, clean with a damp cloth and leave them to dry.

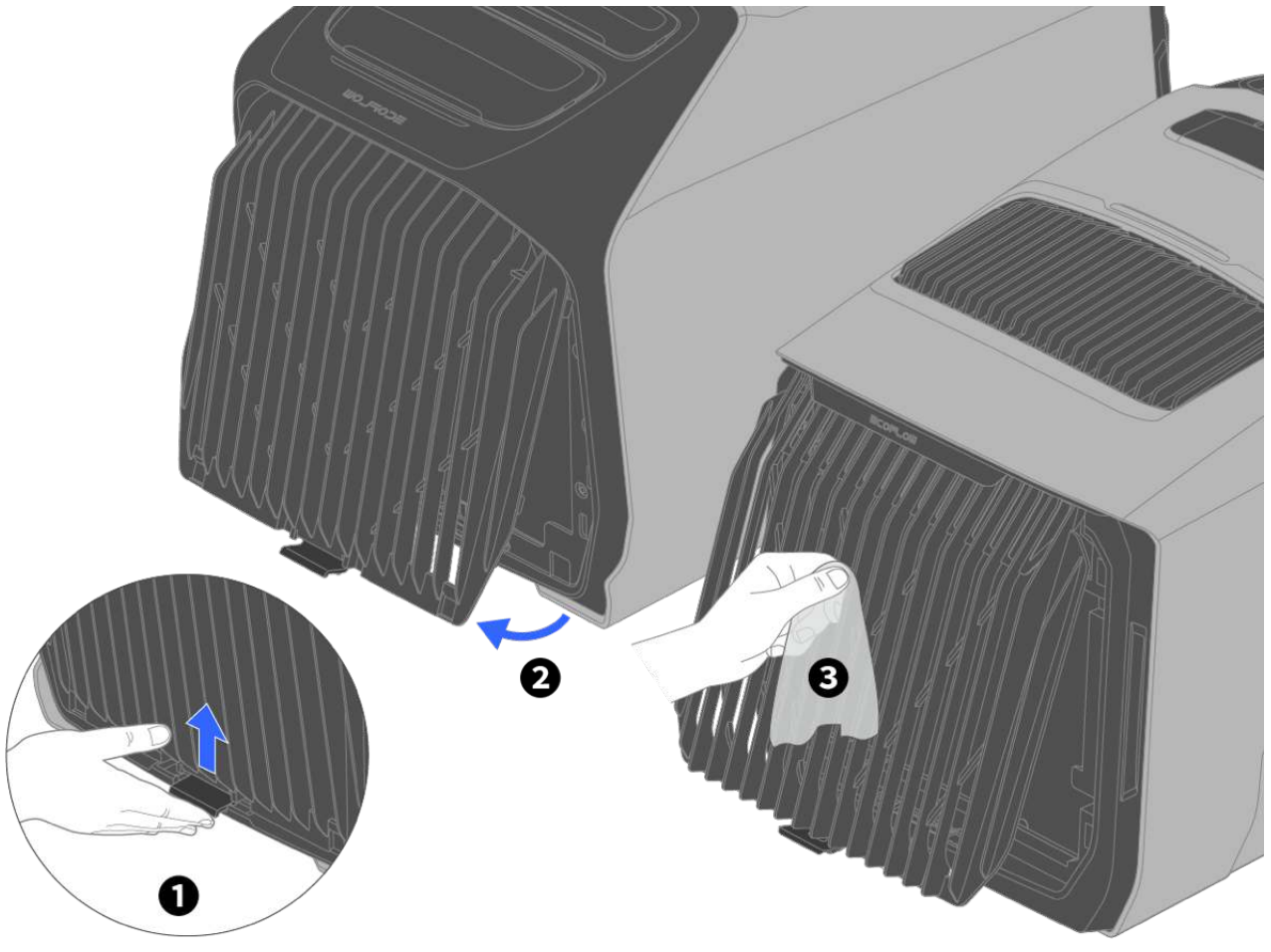

Safety Instructions and Compliances

Disclaimer

Please read the product document and ensure that you understand it fully before using the product. After reading this document, keep it for future reference. Improper use of this product may cause serious injury to yourself or others, or cause product damage and property loss. Once you use this product, it is deemed that you understand, approve, and accept all the terms and content in this document. EcoFlow is not liable for any loss caused by the user's failure to use the product in compliance with the product document. In compliance with laws and regulations, EcoFlow reserves the right to the final interpretation of this document and all documents related to the product. This document is subject to changes (updates, revisions, or termination) without prior notice. Please visit EcoFlow's official website to obtain the latest product information: https://www.ecoflow.com/.

Safety Instructions

1. Do not use this product near a heat source (such as fire or heater), and avoid direct exposure to sunlight. Doing so may cause flammable liquids to leak or explode.
2. Avoid degradation or damage to the product, or risks to personal safety due to excessively high or low temperatures.
3. The plug of the power cord included in the package is a disconnecting device, and the wall outlet to which it is connected must be easily accessible and well grounded.
4. Keep the product away from any liquid. Do not get the product wet, and try to avoid working in a wet location.
5. If there is dirt in any outlets, clean it with a dry cloth.
6. Do not use this product in environments with strong static electricity or magnetic fields (such as a thunderstorm).
7. Do not touch product outlets with wires or other metal objects, otherwise the product may short circuit.
8. Do not put your fingers into the air inlet/outlet.
9. Do not disassemble the product or extend any power cord without authorization since this may result in electric shock or even fire.
10. Only qualified person is permitted for maintenance, service and repair operations.
11. If the supply cord is damaged, it must be replaced by the manufacturer, its service agent or similarly qualified persons in order to avoid a hazard.
12. Do not place the battery where the air pressure is extremely low. As this may cause flammable liquids to leak or explode.
13. Do not stand or sit on the product.
14. Do not pile heavy objects on the product.
15. Do not obstruct the air inlet/outlet or exhaust pipe during operation.
16. Please store the product where it is dry and ventilated, and ensure that the distance between the air inlet/outlet and the wall is >0.5 m.
17. The product shall be installed in accordance with national wiring regulations
18. Do not use unofficial components or accessories since they will void your

warranty. If they need to be replaced, please purchase them through the official EcoFlow distribution channels.

19. Please keep the product out of the reach of pets. Children should not operate this product without supervision.
20. Electromagnetic fields created by this product may affect the normal functioning of medical implants or personal medical devices, such as pacemakers, cochlear implants, hearing aids, defibrillators and so on. If you are using these medical devices, please consult the manufacturers about the restrictions on the use of relevant devices to ensure that a safe distance is maintained between this product and the implanted medical devices (such as pacemakers, cochlear implants, hearing aids, defibrillators and so on) during operation.
21. This product can be used by children aged 8 years and above and persons with reduced physical, sensory or mental capabilities or lack of experience and knowledge if they have been given supervision or instruction concerning use of the product in a safe way and understand the hazards involved. Children should not play with the product. Cleaning and maintenance should not be made by children without supervision.
22. Do not remove the filters while the product is working as this may cause a hazard (e.g. if the household AC socket is not grounded, there may be a risk of electrical leakage).
23. Please note that the nameplate is on the bottom of the product.

In Case of Emergency

1. During the operation or transportation of the product, please avoid external damages, like drops or impact to prevent any damages to the internal compressor. If the product is tilted (for over 10 minutes) or impacted by a strong external force, immediately turn the power off and remove the power cord. Leave it to stand for at least 2 hours before using.
2. If the product catches fire by accident, we recommend that you use fire extinguishers in the following order: water or water mist, sand, fire blanket, dry powder, and carbon dioxide.
3. If the product is wet inside, immediately turn the power off and remove the power cord, place them in a safe open area. Stay away from the product until it is dry. Please take measures to prevent electric shock when touching it. Do not operate or discard the dry product without authorization. Please contact the customer service to dispose of it properly.

Warning

1. Do not use means to accelerate the defrosting process or to clean, other than those recommended by the manufacturer.
2. The product shall be stored in a room without continuously operating ignition sources (for example: open flames, an operating gas appliance or an operating electric heater.
3. Do not pierce or burn.
4. Be aware that refrigerants may not contain an odour.

Regulatory Compliance

FCC Compliance Statement

Any Changes or modifications not expressly approved by the party responsible for compliance could void the user's authority to operate the equipment.
This device complies with part 15 of the FCC Rules. Operation is subject to the following two conditions:
(1) This device may not cause harmful interference, and
(2) this device must accept any interference received, including interference that may cause undesired operation.
This equipment has been tested and found to comply with the limits for a Class B digital device, pursuant to Part 15 of the FCC Rules. These limits are designed to provide reasonable protection against harmful interference in a residential installation. This equipment generates uses and can radiate radio frequency energy and, if not installed and used in accordance with the instructions, may cause harmful interference to radio communications. However, there is no guarantee that interference will not occur in a particular installation. If this equipment does cause harmful interference to radio or television reception, which can be determined by turning the equipment off and on, the user is encouraged to try to correct the interference by one of the following measures:

- Reorient or relocate the receiving antenna.
- Increase the separation between the equipment and receiver.
- Connect the equipment into an outlet on a circuit different from that to which the receiver is connected.
- Consult the dealer or an experienced radio/TV technician for help.

RF exposure statement

This equipment complies with the FCC radiation exposure limits set forth for an uncontrolled environment. This transmitter must not be co-located or operating in conjunction with any other antenna or transmitter.

INDUSTRY CANADA COMPLIANCE

This device complies with Industry Canada licence-exempt RSS standard(s) Operation is subject to the following two conditions:
(1) this device may not cause interference, and
(2) this device must accept any interference, including interference that may cause undesired operation of the device.
Le présent appareil est conforme aux CNR d'Industrie Canada applicables aux appareils radio exempts de licence. L'exploitation est autorisée aux deux conditions suivantes:
(1) l'appareil nedoit pas produire de brouillage, et
(2) l'utilisateur de l'appareil doit accepter tout brouillage racdioélectrique subi, même si le brouillage est susceptible d'en compromettre lefonctionnement.
This Class B digital apparatus complies with Canadian ICES-003.
Cet appareil numérique de la classe B est conforme à la norme NMB-003 du Canada.
CAN ICES(B) / NMB(B)

RF exposure statement

This equipment complies with the ISED radiation exposure limits set forth for an uncontrolled environment. This transmitter must not be co-located or operating in conjunction with any other antenna or transmitter.
Cet équipement est conforme aux limites d'exposition aux rayonnements de l'ISED établies pour un environnement non contrôlé. Cet émetteur ne doit pas être co-localisé ou fonctionner en conjonction avec une autre antenne ou un

autre émetteur.

The Bluetooth® word mark and logos are registered trademarks owned by Bluetooth SIG, Inc. and any use of such marks by EcoFlow Inc. is under license. Other trademarks and trade names are those of their respective owners.

CE

Hereby, EcoFlow Inc. declares that the radio equipment type portable power station is in compliance with Directive 2014/53/EU. The full text of the EU Declaration of Conformity is available at the following Internet address:
EU: http://www.ecoflow.com/eu/eu-compliance

Radio Frequency (RF) Specifications for EU

Bluetooth
Frequency: 2402 MHz - 2480 MHz
Maximum Output Power: 9.16 dBm

WLAN
Frequency: 2412 MHz - 2472 MHz (20M)/2422-2462 MHz (40M)
Maximum Output Power: 17.66 dBm

WEEE

This marking indicates that this product should not be disposed of with other household waste within the EU. Recycle this product properly to prevent possible damage to the environment or a risk to human health via uncontrolled waste disposal and in order to promote the sustainable reuse of material resources. Please return your used product to an appropriate collection point or contact the retailer where you purchased this product. Your retailer will accept used products and return them to an environmentally-sound recycling facility.
For information on the disposal of electrical and electronic equipment, please visit the following website:
https://eu.ecoflow.com/pages/electronic-devices-disposal

Technical Specifications

Cooling/Heating Specifications	
Model	EF-WA-H01-3
Cooling Capacity/Heating Capacity	1800W/2000W (6100/6800BTU)
Temperature Setting Range	16°C-30°C (60°F-86°F)
Refrigerant	R290 (112g/AU: 140g)
Air Flow Volume	330m³/h
Cooling/Heating Rated Input (AC)	690W/645W
Cooling/Heating Rated Input (DC)	640W/606W

Maximum Cooling/Heating Power	700W
Input Specifications	
AC Input	100-240V~50/60Hz, 820W Max
DC Input (Extra Bttery Port)	700W Max
Other Specifications	
Operating Altitude	< 2000 m (6562 ft)
Overflow Shutdown Function	Supported
IP Rating	IPX4
Noise Level	44-58 dB
Permissible Pressure Range (High Pressure/Low Pressure)	2.24MPa/0.74MPa
Operating Temperature	5°C to 50°C (41°F to 122°F)
Storage Temperature	-10°C to 60°C (14°F to 140°F)
Energy Rating	
Cooling/Heating (AC)	2.6/3.1
Cooling/Heating (DC)	2.8/3.3
General Information	
Net Weight*	Approximately 15.3 kg (33.7 lbs)
Dimensions	519 × 297 × 336 mm (20.4 × 11.7 × 13.2 in)
Wi-Fi (2.4G)/ Bluetooth	Supported

The net weight of the product may vary slightly across regions due to differences in regulations and cable specifications. Please refer to the actual product received.

What's in the Box



1. EcoFlow WAVE 3
2. Exhaust Duct Adapter Cover A/B/C
3. Insulated Exhaust Duct D/E
4. Duct Size Template
5. Drain pipe
6. Winder
7. Manuals and Warranty Card

- If any item is damaged or missing, contact EcoFlow Customer Service for assistance.
- The type and appearance of the AC power cord (pluggable or embedded) may vary depending on local regulations. Please refer to the actual product for details.

Copyright © 2025 EcoFlow. All Rights Reserved.